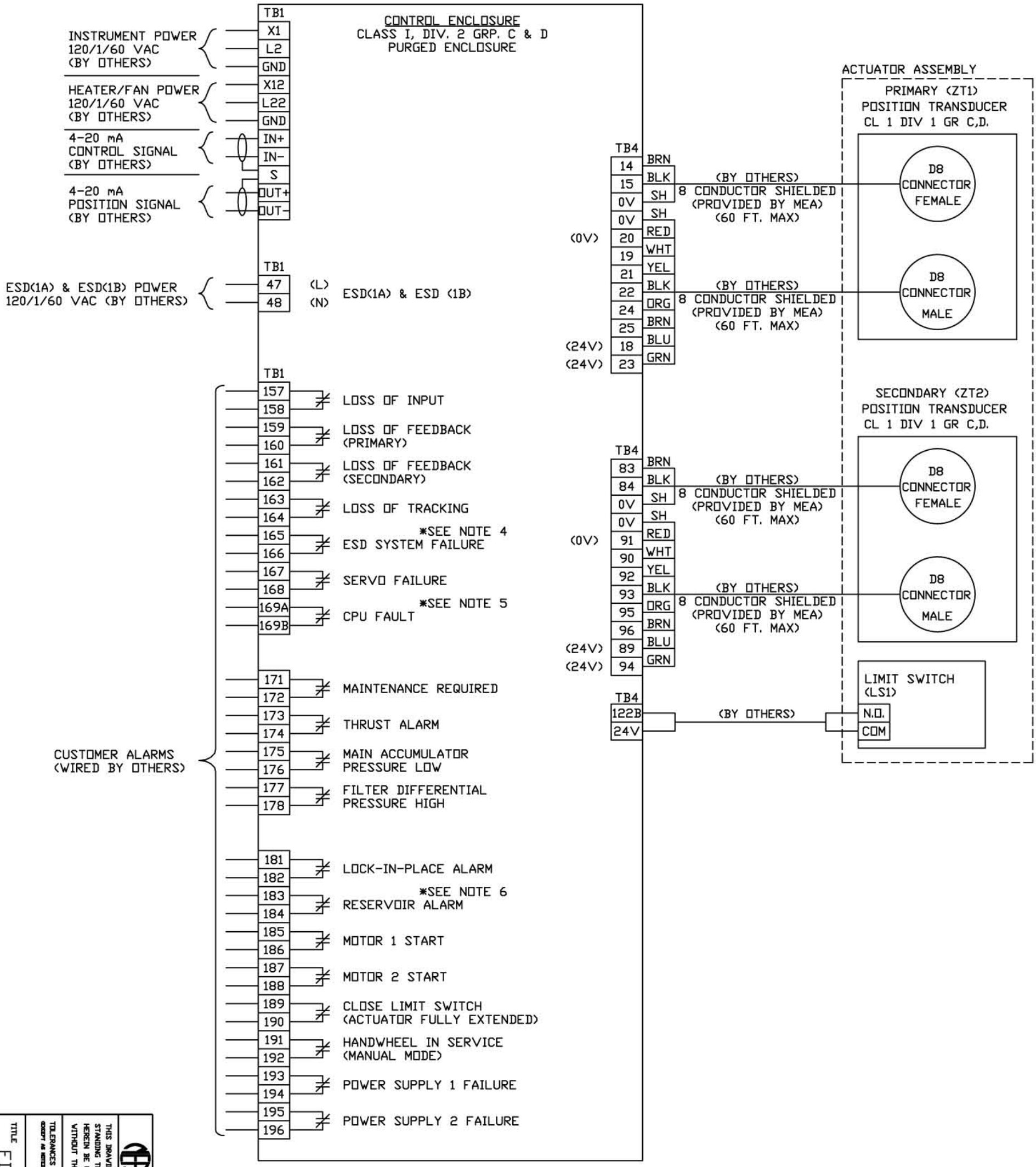

NOTES:

1. CONNECTIONS TO BE WIRED BY CUSTOMER.
2. RELAYS ARE SHOWN IN NORMAL OPERATING STATE. IN SHELF STATE AND IN FAILURE MODE THE RELAY CONTACTS BECOME NORMALLY OPEN (N.O.).
3. NOT SHOWN IS THE CONNECTIONS TO THE MOTORS. THEY ARE 460/3/60 VAC.
4. "ESD SYSTEM FAILURE" IS COMPRISED OF "ESD LOW ACCUMULATOR PRESSURE," "ESD TEST ENABLED," AND "ESD REQUEST."
5. "CPU FAULT" IS COMPRISED OF EITHER CPU1 OR CPU2 FAULT.
6. "RESERVOIR ALARM" IS COMPRISED OF "LOW OIL LEVEL" OR "HIGH OIL TEMPERATURE."

DATE	SYM	REVISION RECORD	ECN#	DR	CK

THIS IS AN AUTOCAD DRAWING. DO NOT REVISE MANUALLY.

CAD FILE # 11808

INC., ELK GROVE, ILL.

THIS DRAWING IS THE PROPERTY OF M.E.A. INC. IT IS LOANED WITH THE UNDERSTANDING THAT IT MAY NOT BE REPRODUCED NOR MAY THE INFORMATION CONTAINED HEREIN BE USED FOR THE MAKING OF DRAWINGS OR FOR MANUFACTURING PURPOSES WITHOUT THE WRITTEN CONSENT OF M.E.A. INC.

TOLERANCES EXCEPT AS NOTED ±NA

SCALE NA

DRAWN BY MC

CK RM

APPROVED BY MAC

TITLE FIELD WIRING - NEC / UOP

DATE 04/23/08

DRAWING NUMBER CP13145-520

REV. 0