DATE	SYM	REVISION RECORD	ECN#	DR	CK

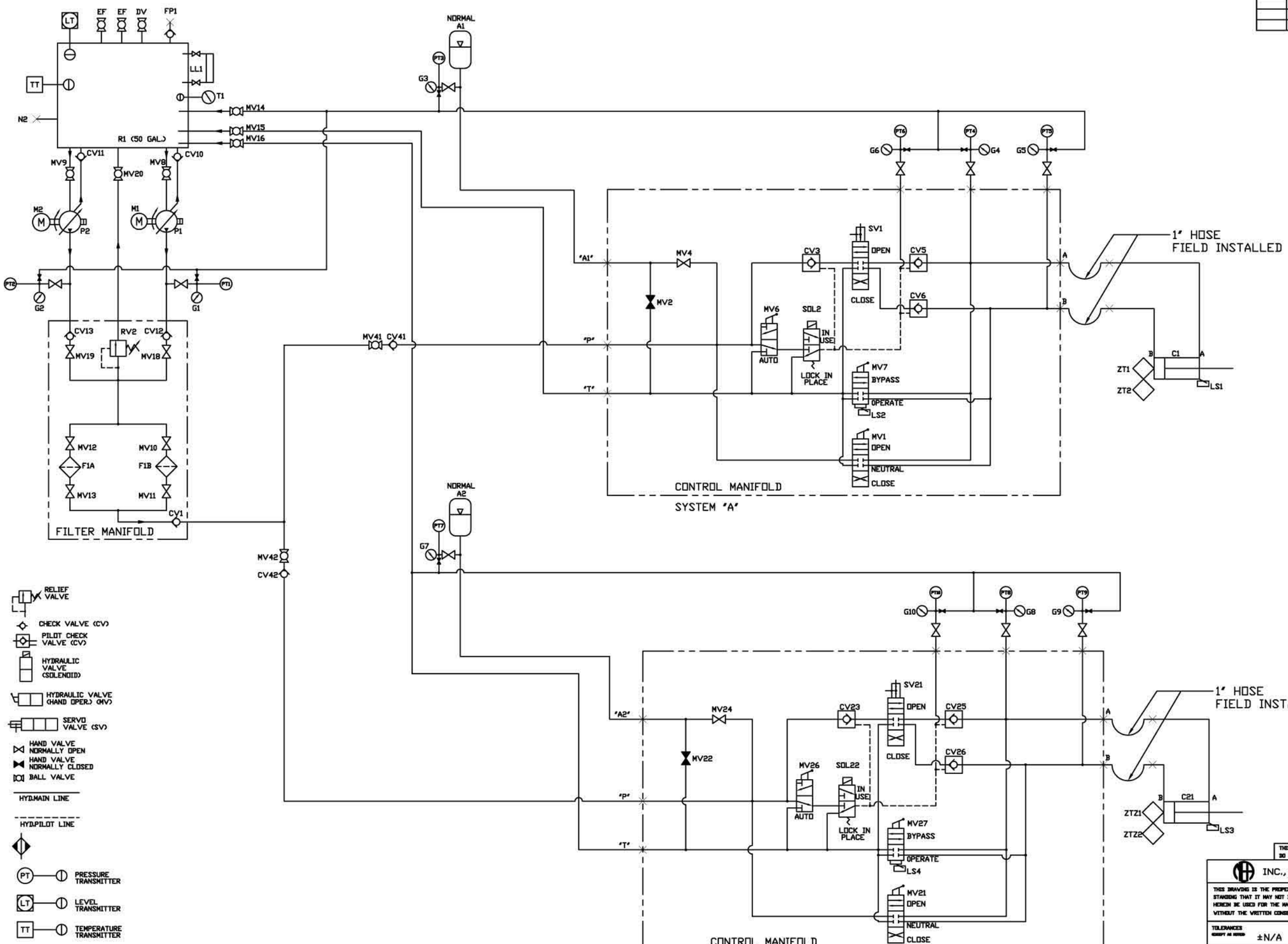

NOTES:
SOLENOIDS SHOWN IN SHELF STATE

THIS IS AN AUTOCAD-13 DRAWING. DO NOT REVISE MANUALLY.

CAD FILE # 11815

INC., ELK GROVE,ILL.

THIS DRAWING IS THE PROPERTY OF H.E.A. INC. IT IS LOANED WITH THE UNDERSTANDING THAT IT MAY NOT BE REPRODUCED NOR MAY THE INFORMATION CONTAINED HEREIN BE USED FOR THE MAKING OF DRAWINGS OR FOR MANUFACTURING PURPOSES WITHOUT THE WRITTEN CONSENT OF H.E.A. INC.

TOLERANCES	SCALE	DRAWN BY MC	CK RM
±N/A	NTS	APPROVED BY MAC	

TITLE DOUBLE DISC FLUE GAS HYDRAULIC SCHEMATIC NEC CODE / UOP SPECIFICATION

DATE	DRAWING NUMBER	REV.
4-24-08	DP12211-504	0