DATE	SYM	REVISION RECORD	ECN#	DR	CK
6/3/08	A	CHG PTC OF PRESSURE TRANSMITTER FROM 6 TO 7, CHG NOTE 4; ADD NOTE 5; CHG SAE 3/4" SAE (4) BOLT FLANGES NOW SAE 1" SAE (4) BOLT FLANGES	3932	CC	MC

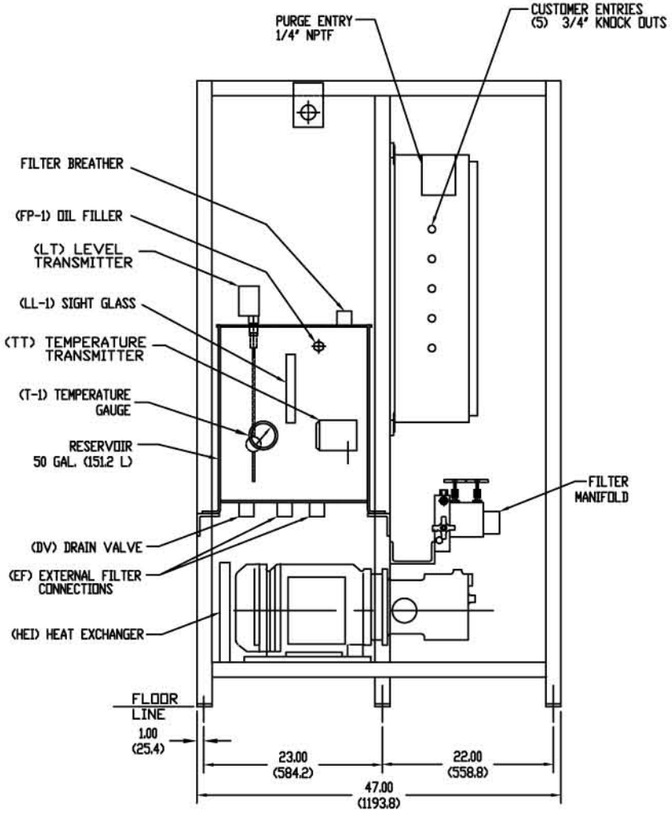

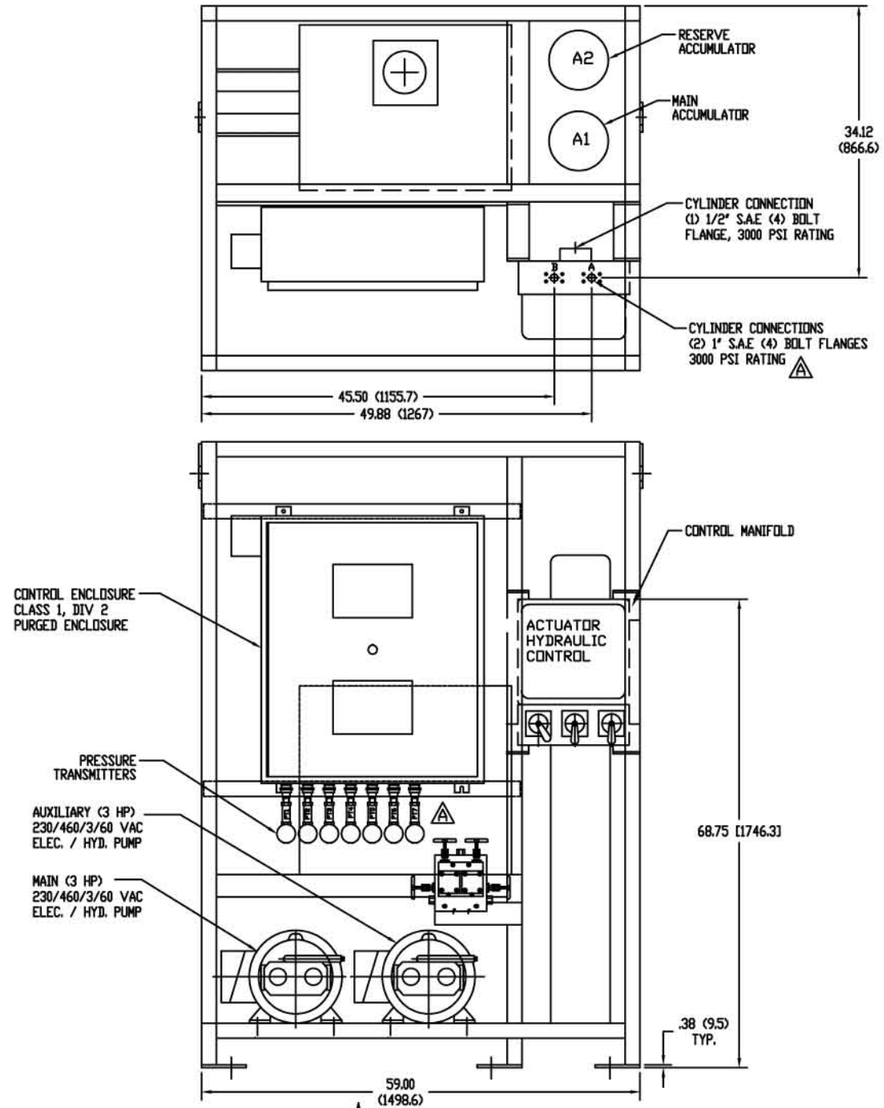

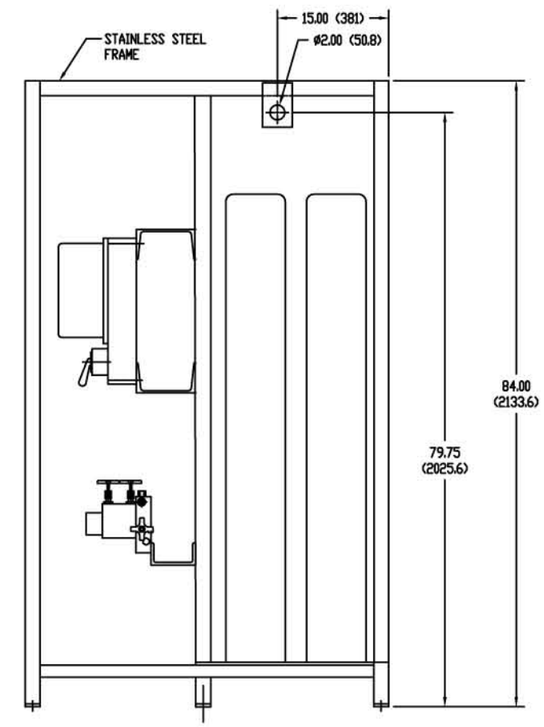

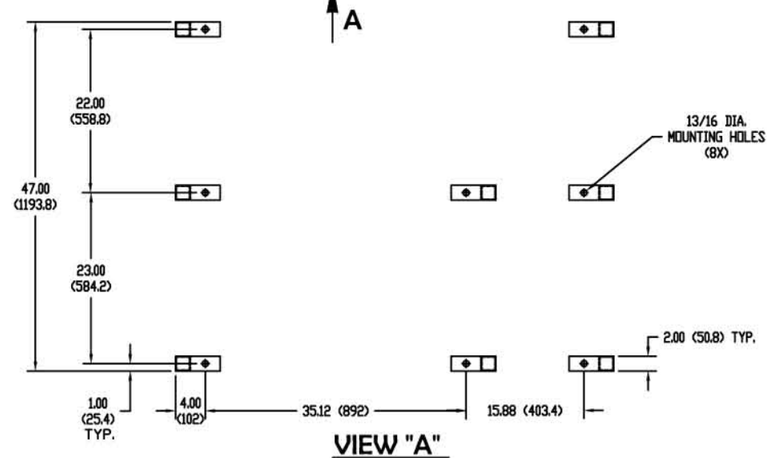

VIEW "A"

MOUNTING HOLE PATTERN ONLY

NOTES:

1. WEIGHT APPROX.: 2400 LBS. (1090 KG)
2. DIMENSIONS IN INCHES (MM)
3. CUSTOMER TO PROVIDE SUN SHADE & HEAT SHIELDING AS NECESSARY TO PREVENT RADIATED HEAT FROM PIPING & VESSELS.
5. 1/2" DIA. AND 3/4" DIA. HOSES FOR INTERCONNECTIONS OF HPU AND CYLINDERS FURNISHED BY MEA. A

D13145-503 (REF)

THIS IS AN AUTOCAD-13 DRAWING. DO NOT REVISE MANUALLY. | CAD FILE # 11538A

INC., ELK GROVE,ILL.

THIS DRAWING IS THE PROPERTY OF M.E.A. INC. IT IS LOANED WITH THE UNDERSTANDING THAT IT MAY NOT BE REPRODUCED NOR MAY THE INFORMATION CONTAINED HEREIN BE USED FOR THE MAKING OF DRAWINGS OR FOR MANUFACTURING PURPOSES WITHOUT THE WRITTEN CONSENT OF M.E.A. INC.

TOLERANCES EXCEPT AS NOTED	SCALE	DRAWN BY CC	CK MC
±N/A	NTS	APPROVED BY MC	

TITLE HYDRAULIC POWER UNIT OUTLINE
FCCU3-PV-1A AND FCCU3-PV-1B PLUG VALVES

DATE	DRAWING NUMBER	REV.
1/24/08	D13150-501	A